PHOTOVOLTAIC STRUCTURES CATALOG | 2024

ES ENERGY SYSTEMS

ENERGY SYSTEMS

Founded in 2016, Energy Systems locates its factories and warehouses in the city of Braga, in the northern region of Portugal.

With the aim of becoming a **globally recognised brand** for its **creation capability, superior quality, and product performance**, Energy Systems continuously **invests in its Engineering and R&D departments**, always guided by its core values: quality, innovation, sustainability, technology, and social responsibility.

PRODUCTS AND SERVICES

We are **specialists in the development of fixation and support systems for photovoltaic modules** with a complete range of accessories and components, designed to make installation and assembly operations easier and faster.

We have the **latest technology machinery for cutting and shaping profiles**, producing **standard and customised solutions** for all types of projects on roofs, carports and ground systems.

We have a **permanent stock** of dozens of tons of structures ready for delivery, with shipments within 24 hours.

ES ENERGY SYSTEMS

QUALITY AND GUARANTEE

Energy Systems certifies that all of its components follow a rigorous engineering and quality process, which guarantees high performance when installing photovoltaic modules by mechanical or 3M Bonding fixation.

Our aluminum profiles are produced in EN AW-6060 aluminum alloy with T5 treatment (EN 573-3 and EN 755-2), with guarantees against manufacturing defects and corrosion, for a period of fifteen (15) years. In accordance with EN 13195-1, extruded aluminum alloys from the EN AW 60xx range are suitable for naval architecture, other marine applications and offshore technology, and are not harmed by saline environments. They are characterized by their excellent material performance and corrosion resistance, and can also be offered in anodized aluminum.

The accessories sold are produced in A2 stainless steel and comply with ISO 4759/1 and DIN 267/2 standards.

All of our structures have CE Marking and are fully developed and manufactured in Portugal, following ISO 9001 and EN1090-3 quality standards and sized in accordance with Eurocodes 1, 2 and 3, EN206-1, EN10025-2, EN1993- 1-1:2005, and EN1993-1-8:2005

TÜVRheinland CERTIFIED
Management System
ISO 9001:2015
www.tuv.com
ID 9000000576

CERAMIC ROOF TILES

EASY ROOF

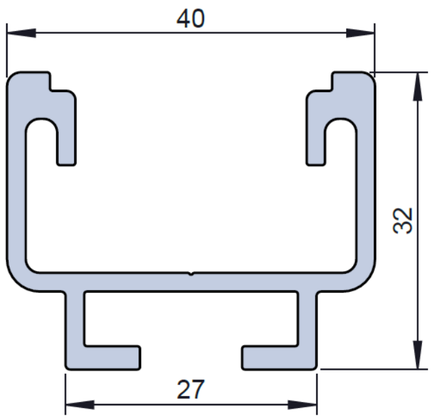

Compatible with various types of fastening accessories due to its bottom slot for fitting “T” type screws.

Optional - anodized 15 or 25 mícrons

CODE	SIZE	PACK S	PACK M	PACK L
040145	1,2m	32 Units	128 Units	192 Units
040400	2,4m	32 Units	128 Units	192 Units
040326	4,8m	32 Units	128 Units	192 Units

COPLANAR - METALLIC COVERS MECHANICAL FIXATION

EASY PLAN LIGHT BAR

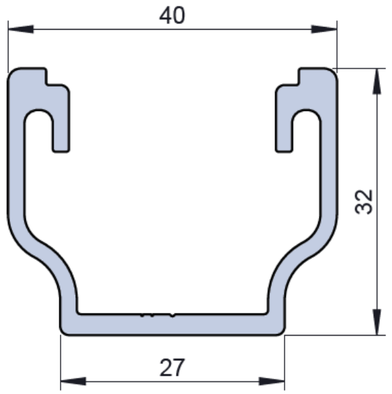

Compatible with all types of metal sheets and sandwich type roof. Can be fixed using self-drilling or rivets.

Optional - anodized 15 or 25 mícrons.

CODE	SIZE	PACK S	PACK M	PACK L
040003	4,5m	40 Units	160 Units	240 Units

MINI RAIL EASY PLAN LIGHT

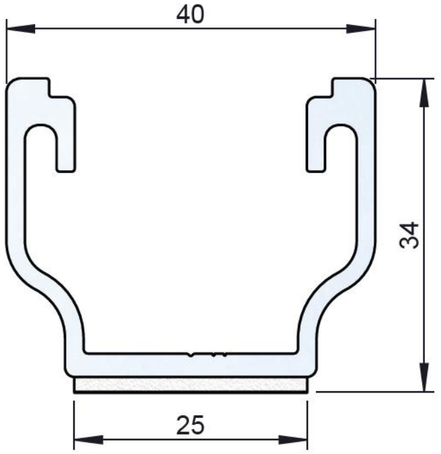

Adaptable for horizontal or vertical installations on all types of metal and sandwich type roofs. Can be fixed using self-drilling screws or rivets. Also used for cable tray/track installation.

Optional - Anodized 15 or 25 mícron.

With or without EPDM

MINI RAIL EASY PLAN LIGHT

MINI RAIL WITHOUT EPDM				
CODE	SIZE	PACK S	PACK M	PACK L
040152	100mm	56 Units	140 Units	384 Units
040153	200mm	28 Units	70 Units	192 Units
040154	300mm	20 Units	50 Units	128 Units
040155	400mm	8 Units	16 Units	96 Units
040156	500mm	8 Units	16 Units	32 Units
040157	600mm	8 Units	16 Units	32 Units

MINI RAIL WITH EPDM				
CODE	SIZE	PACK S	PACK M	PACK L
040359	100mm	56 Units	140 Units	336 Units
040360	200mm	28 Units	70 Units	168 Units
040361	300mm	20 Units	50 Units	128 Units
040362	400mm	8 Units	16 Units	96 Units
040363	500mm	8 Units	16 Units	32 Units
040364	600mm	8 Units	16 Units	32 Units

ANCHORING SYSTEM

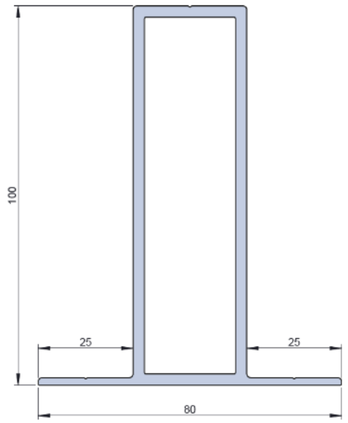

Adaptable for horizontal or vertical installations on all types of metal sheets and sandwich panels, capable of being fixed using self-drilling screws or rivets. Also used for cable tray/track installation.

Optional - anodized 15 or 25 mícrons

With or without EPDM

ANCHORING SYSTEM

ANCHORING SYSTEM WITHOUT EPDM				
CODE	SIZE	PACK S	PACK M	PACK L
040348	100mm	10 Units	22 Units	72 Units
040349	200mm	4 Units	10 Units	36 Units
040350	300mm	4 Units	10 Units	25 Units

ANCHORING SYSTEM WITH EPDM				
CODE	SIZE	PACK S	PACK M	PACK L
040409	100mm	10 Units	22 Units	72 Units
040410	200mm	4 Units	10 Units	36 Units
040411	300mm	4 Units	10 Units	25 Units

COPLANAR-METAL AND TPO/PVC ROOF MEMBRANES FIXED BY 3M BONDING

EASY PLAN 3M

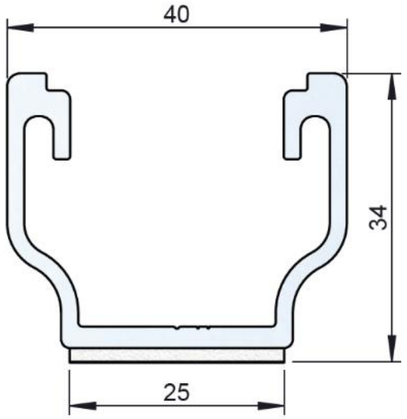

Fixation using an exclusive bonding technology with 3M double-sided tape, No screw, No holes, 100% waterproof system that eliminates the risks of infiltration.

Optional - Anodized 15 or 25 mícrons

Customized structural calculation

Up to 25 years fixation warranty.

ES ENERGY SYSTEMS

EASY PLAN 3M

PV MODULES FIXATION				
CODE	SIZE	PACK S	PACK M	PACK L
040078	200mm	28 Units	70 Units	192 Units
040079	300mm	20 Units	50 Units	128 Units
040080	400mm	8 Units	16 Units	96 Units

CABLE TRAYS FIXATION				
CODE	SIZE	PACK S	PACK M	PACK L
040077	100mm	56 Units	140 Units	384 Units
040078	200mm	28 Units	70 Units	192 Units
040079	300mm	20 Units	50 Units	128 Units
040080	400mm	8 Units	16 Units	96 Units
040081	500mm	8 Units	16 Units	32 Units
040082	600mm	8 Units	16 Units	32 Units

ANCHORING SYSTEM 3M

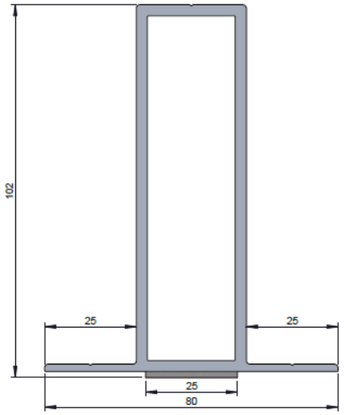

It guarantees an elevation of the structure and allows better ventilation of the photovoltaic modules.

Optional - anodized 15 or 25 mícrons

Customized structural calculation

Up to 25 years fixation warranty.

CODE	SIZE	PACK S	PACK M	PACK L
040354	100mm	10 Units	22 Units	72 Units
040355	200mm	4 Units	10 Units	36 Units
040356	300mm	4 Units	10 Units	25 Units

ES ENERGY SYSTEMS

PITCHED STRUCTURES

TRIANGULAR

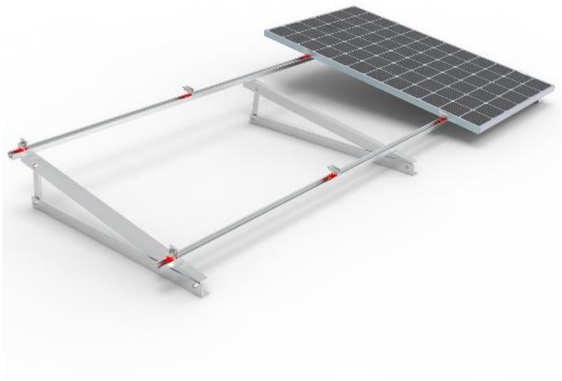

Triangles produced on a high-precision CNC machine, with 4mm thick aluminum. Standard and custom inclinations, for all photovoltaic module dimensions.

Optional - Anodized 15 or 25 mícrons

Angles from 1º to 45º
Triangles for roofs, facades and ground applications.
Also available in double and triple rows

TRIANGULAR

VERTICAL TRIANGLES					
CODE	ANGLE	LENGHT OF MODULES	PACK S	PACK M	PACK L
040195	10º	Up to 1670mm	12 Units	96 Units	192 Units
040198	10º	In between 1671mm e 1980mm	12 Units	96 Units	192 Units
040402	10º	In between 1981mm e 2300mm	12 Units	96 Units	192 Units
040200	15º	Up to 1670mm	12 Units	96 Units	192 Units
040203	15º	In between 1671mm e 1980mm	12 Units	96 Units	192 Units
040403	15º	In between 1981mm e 2300mm	12 Units	96 Units	192 Units
040216	20º	Up to 1670mm	12 Units	96 Units	192 Units
040401	20º	In between 1671mm e 1980mm	12 Units	96 Units	192 Units
040404	20º	In between 1981mm e 2300mm	12 Units	96 Units	192 Units
040142	30º	Up to 1670mm	12 Units	96 Units	192 Units
040177	30º	In between 1671mm e 1980mm	12 Units	96 Units	192 Units
040405	30º	In between 1981mm e 2300mm	12 Units	96 Units	192 Units

TRIANGULAR

HORIZONTAL TRIANGLES					
CODE	**ANGLE**	**MODULES WIDTH**	**PACK S**	**PACK M**	**PACK L**
040197	10º	Up to 1100m	12 Units	144 Units	288 Units
040202	15º	Up to 1100m	12 Units	144 Units	288 Units
040169	30º	Up to 1100m	12 Units	144 Units	288 Units
040195	10º	In between 1101mm e 1400mm	12 Units	144 Units	288 Units
040200	15º	In Between 1101mm e 1400mm	12 Units	144 Units	288 Units
040142	30º	In between 1101mm e 1400mm	12 Units	144 Units	288 Units

BALLAST SYSTEM

Structure with fixation by bonding or ballasts, for horizontal modules. With rear and side wind deflectors.

Optional - Anodised 15 or 25 mícrons

Available in 5º and 10º

For roofs with up to 5º inclination

Customized balance calculation

BALLAST SYSTEM - HORIZONTAL				
CODE	**ANGLE**	**PACK S**	**PACK M**	**PACK L**
---	5º	Customized	Customized	Customized
---	10º	Customized	Customized	Customized

ACCESSORIES AND FIXINGS

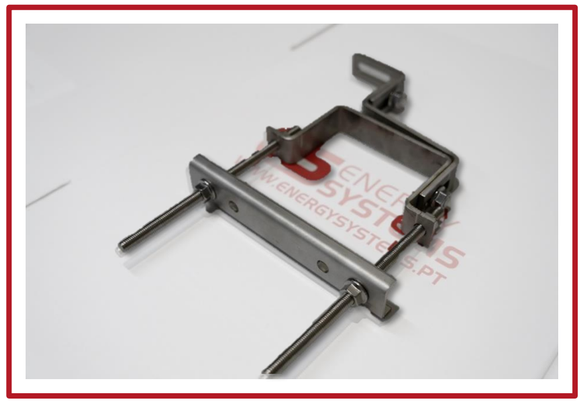

MIDDLE CLAMP

IMAGE	CODE	DESCRIPTION	PACK S	PACK M	PACK L
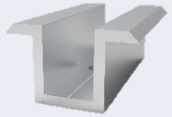	050450	MIDDLE CLAMP ALUMINIUM 60MM	100 Units	200 Units	500 Units

END CLAMP

IMAGE	CODE	DESCRIPTION	PACK S	PACK M	PACK L
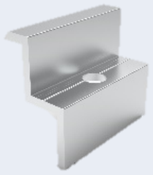	050445	END CLAMP ALUMINIUM - 30MM	50 Units	300 Units	600 Units
	050446	END CLAMP ALUMINIUM - 32MM	50 Units	300 Units	600 Units
	050447	END CLAMP ALUMINIUM - 35MM	50 Units	300 Units	600 Units
	050448	END CLAMP ALUMINIUM - 38MM	50 Units	300 Units	600 Units
	050449	END CLAMP ALUMINIUM - 40MM	50 Units	300 Units	600 Units

RAIL CONNECTOR KIT

IMAGE	CODE	DESCRIPTION	PACK S	PACK M	PACK L
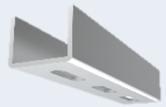	040329	RAIL CONNECTOR KIT WITHOUT SCREWS	10 Units	20 Units	50 Units
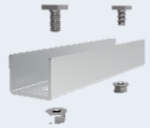	040331	RAIL CONNECTOR KIT	10 Units	20 Units	50 Units

SELF-DRILLING SCREWS

IMAGE	CODE	DESCRIPTION	PACK S	PACK M	PACK L
	050670	STAINLESS STEEL + EPDM 16 DIN 7504 K M5.5X25	100 Units	1000 Units	2000 Units
	050533	STAINLESS STEEL + EPDM 16 DIN 6928 M5.5X25 EJOT	100 Units	1000 Units	2000 Units
	050059	ZINC PLATED DIN 7504 K M6.3X100 EPDM 19	100 Units	300 Units	700 Units
	050666	ZINC PLATED DIN 7504 K M6.3x120 EPDM 19	100 Units	300 Units	700 Units

ACCESSORIES – CERAMIC TILES

IMAGE	CODE	DESCRIPTION	PACK S	PACK M	PACK L
	040148	ADJUSTABLE HOOK STAINLESS STEEL A2	10 Units	20 Units	…
	040357	ROOF BEAM FIXING CLAMP ES HORIZONTAL	10 Units	20 Units	…
	040358	ROOF BEAM FIXING CLAMP ES VERTICAL	…	10 Units	...
	050515	FIXING SCREW WITH DOUBLE THREAD + ADAPTOR PLATE	50 Units	…	100 Units
	050503	ADAPTOR PLATE - INOX 9035 82X40X5-11/11	25 Units	100 Units	100 Units

ES ENERGY SYSTEMS

SCREWS AND THREADED RODS

IMAGE	CODE	DESCRIPTION	PACK S	PACK M	PACK L
	050588	STAINLESS STELL DIN 912 M8X30	100 Units	800 Units	1200 Units
	050164	STAINLESS STELL DIN 912 M8X35	100 Units	800 Units	1200 Units
	050165	STAINLESS STEEL DIN 912 M8X40	100 Units	600 Units	1000 Units
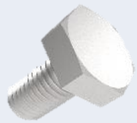	050183	STAINLESS STEEL DIN 933 M8X20	100 Units	1000 Units	2000 Units
	050192	STAINLESS STEEL DIN 933 M10X20	100 Units	400 Units	800 Units
	050150	T- STAINLESS STEEL DIN 9097 M8X20	100 Units	600 Units	1000 Units
	050159	T- STAINLESS STEEL DIN 9097 M10X20	100 Units	400 Units	800 Units
	050487	T- STAINLESS STEEL DIN 9097 M10X30	100 Units	400 Units	800 Units
	050571	STAINLESS STEEL DIN 603 M10X20	100 Units	400 Units	600 Uniys
	050648	THREADED ROD - STAINLESS STELL DIN976 M10X200	10 Units	100 Units	...

ES ENERGY SYSTEMS

NUTS

IMAGE	CODE	DESCRIPTION	PACK S	PACK M	PACK L
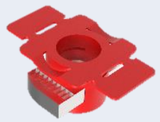	050389	NUT WITH PLASTIC CLIP M8	100 Units	300 Units	600 Units
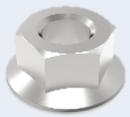	050396	NUT- STAINLESS STEEL DIN 6923 M10	100 Units	800 Units	1400 Units
	050395	NUT- STAINLESS STEEL DIN 6923 M8	100 Units	1200 Units	1400 Units

CABLES AND CONNECTORES

IMAGE	CODE	DESCRIPTION	PACK S	PACK M	PACK L
	060858	CABLE DC BLACK 6MM2	500mts		
	060903	CABLE DC BLACK 4MM2	500mts		
	060859	CABLE DC RED 6MM2	500mts		
	060902	CABLE DC RED 4MM2	500mts		
	060697	COPPER WIRE H07V-K V/A 1X6	100mts		
	050452	GROUNDING CLIP RAYVOLT	100 Units	1500 Units	3500 Units
	070245	CONECT. MC4 MALE CONECT+CONTACT 6MM2	25 Units	100 Units	200 Units
	070248	CONECT. MC4 FEMALE CONECT+CONTACT 6MM2	25 Units	100 Units	200 Units

ES ENERGY SYSTEMS

MONITORING, EQUIPMENT AND ACCESSORIES

IMAGE	CODE	DESCRIPTION
	010871	ITRON SL7000 THREE-PHASE COUNTER-DIRECT COUNTING
	010823	ITRON MODEM RB800D MONITORING
	010934	MONITORING ROUTER TELTONIKA RUT 240
	010857	SMART METER ALGODUE UPM 209
	010947	HIGH GAIN ANTENNA 6dBi
	010994	IRRADIATION SENSOR
	011127	MODBUS RTU WIND SENSOR

ENERGY SYSTEMS

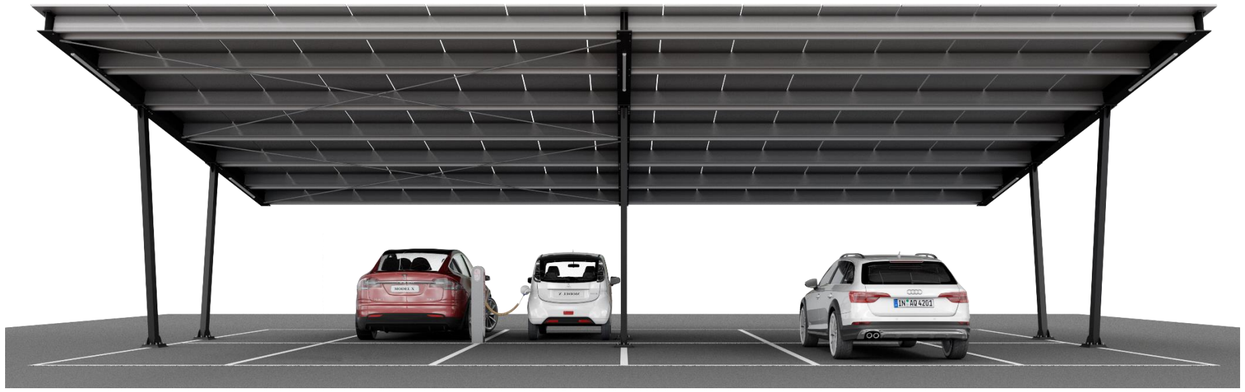

CARPORT

CARPORT - SINGLE & DOUBLE

SINGLE CARPORT

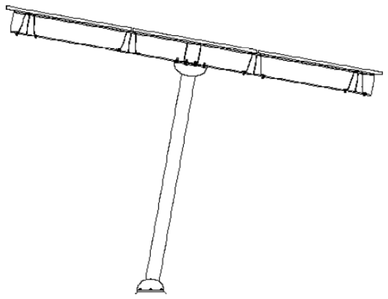

Support distance: 5m or 7,5m

DOUBLE CARPORT

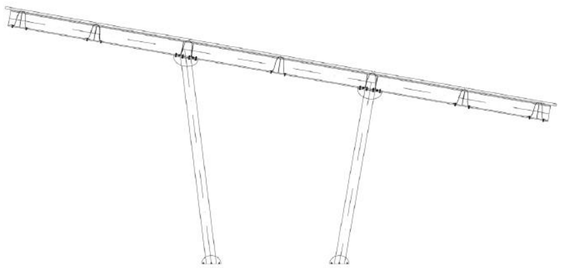

DETAILS

Manufacturing warranty: 5 years;
Profiled and flat steel products $275 JR in accordance with EN 10025-2;
Metallic components in accordance with EN 1993-1-1: 2005 and EN 1993-1-8: 2005;
Anti-corrosion treatment carried out by hot galvanizing with a 20-year guarantee.
Zinc coating: average 93um;
Additional anti-corrosion treatment and painting options;
The structures were designed in accordance with applicable standards and regulations, namely Eurocodes 1, 2 and 3, RSABEP, REBAP, REE and EN206-1.

PROJECTS

ENERGY SYSTEMS

GLOBAL DISTRIBUTION

ES ENERGY SYSTEMS

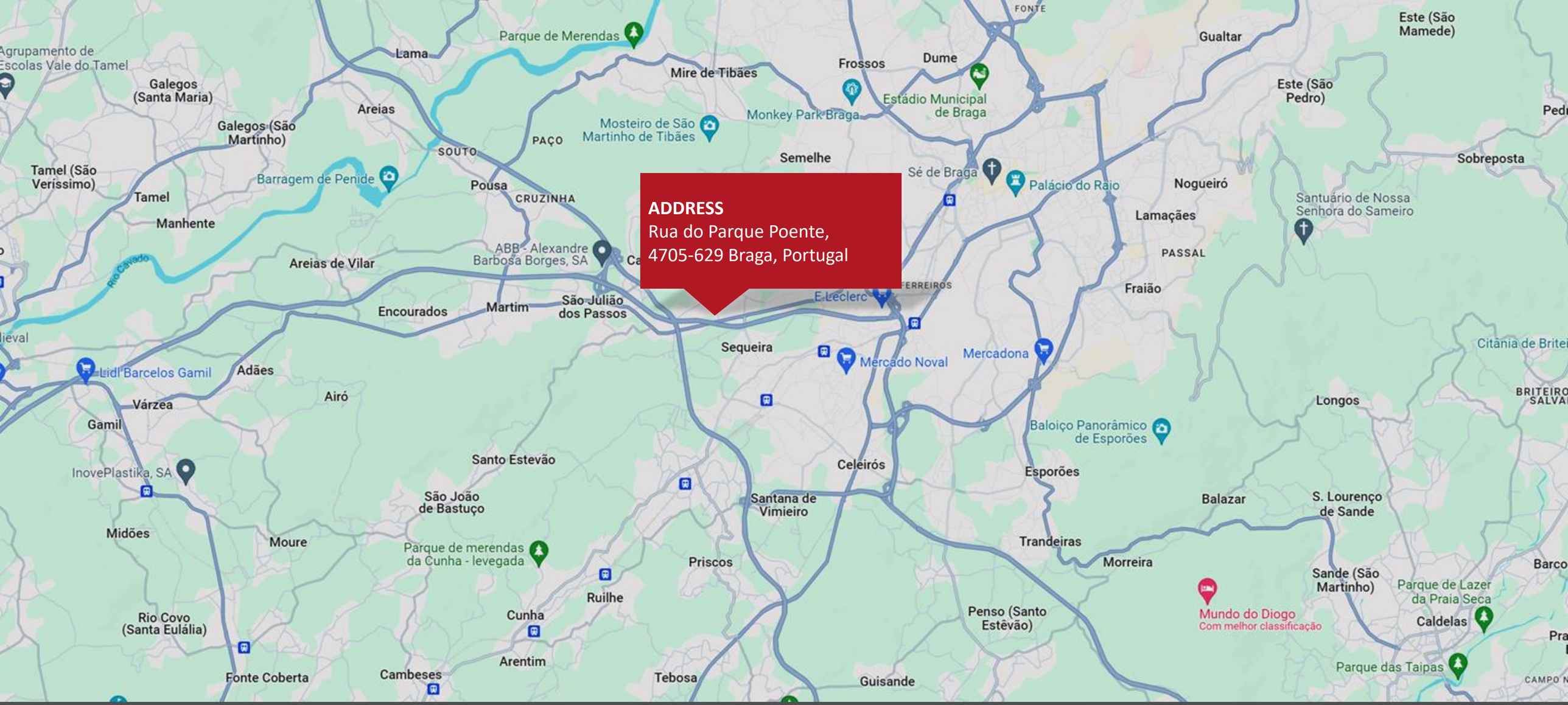

Get In Touch

WEB & EMAIL
info@energysystems.pt
www.energysystems.pt

CONTACT
+351 253 145 794
+351 963 314 290

ES ENERGY SYSTEMS